3. Power Supply Circuit

A: WIRING DIAGRAM

P-SUP-01

P-SUP-01

MAIN FUSE BOX (M/B)

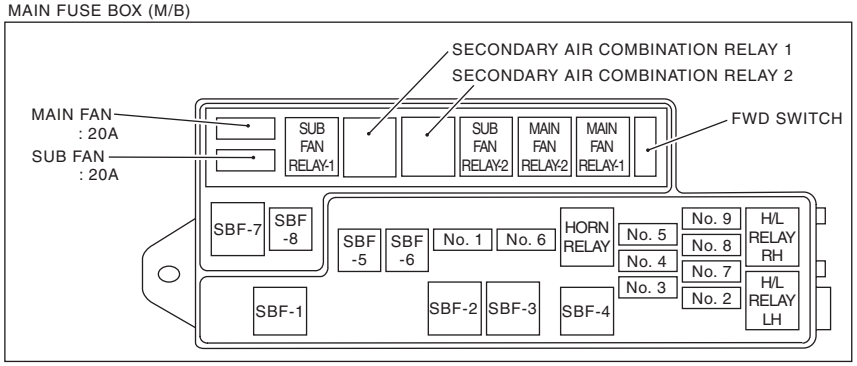

SECONDARY AIR FUSE BOX

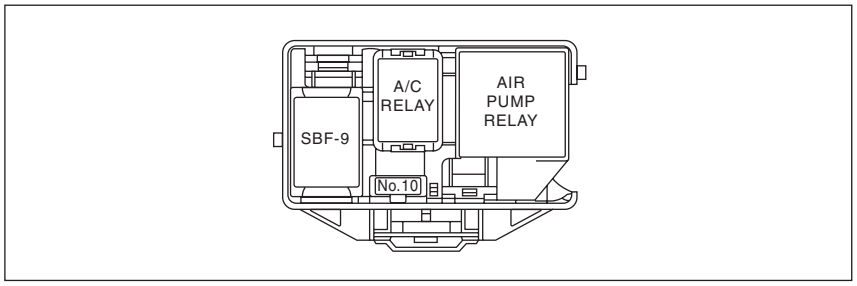

FUSE & RELAY BOX (F/B)

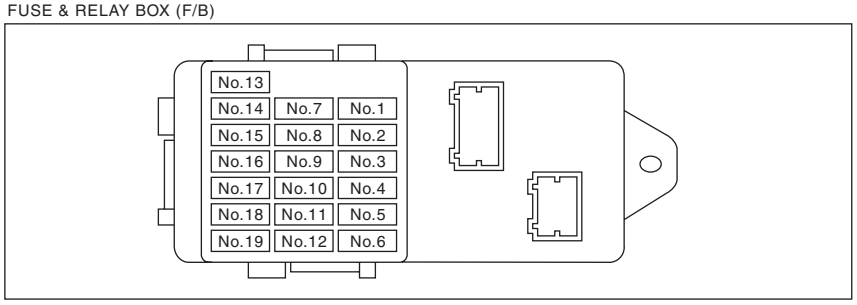

WI-14306

Power Supply Circuit

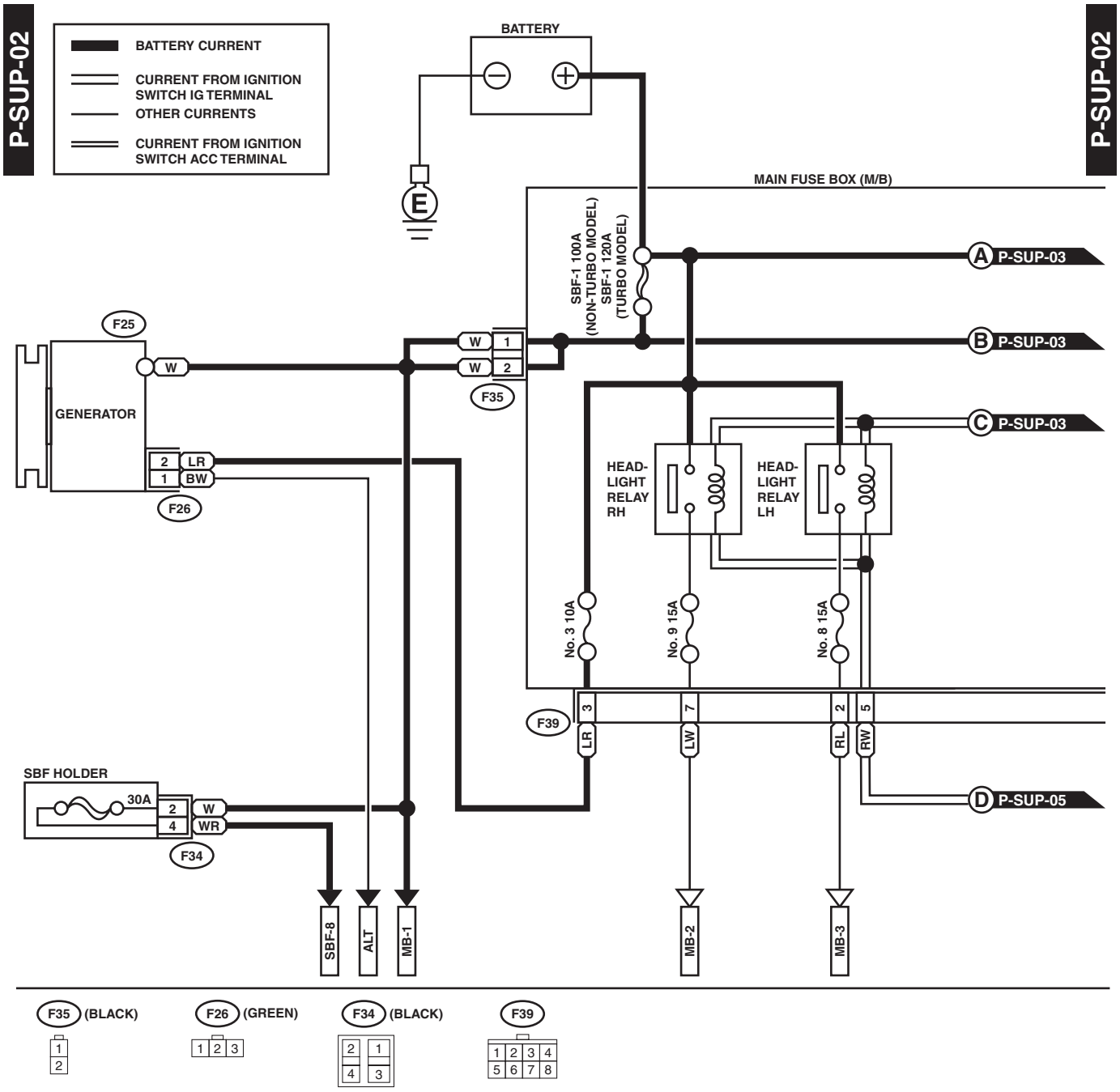

WI-15148

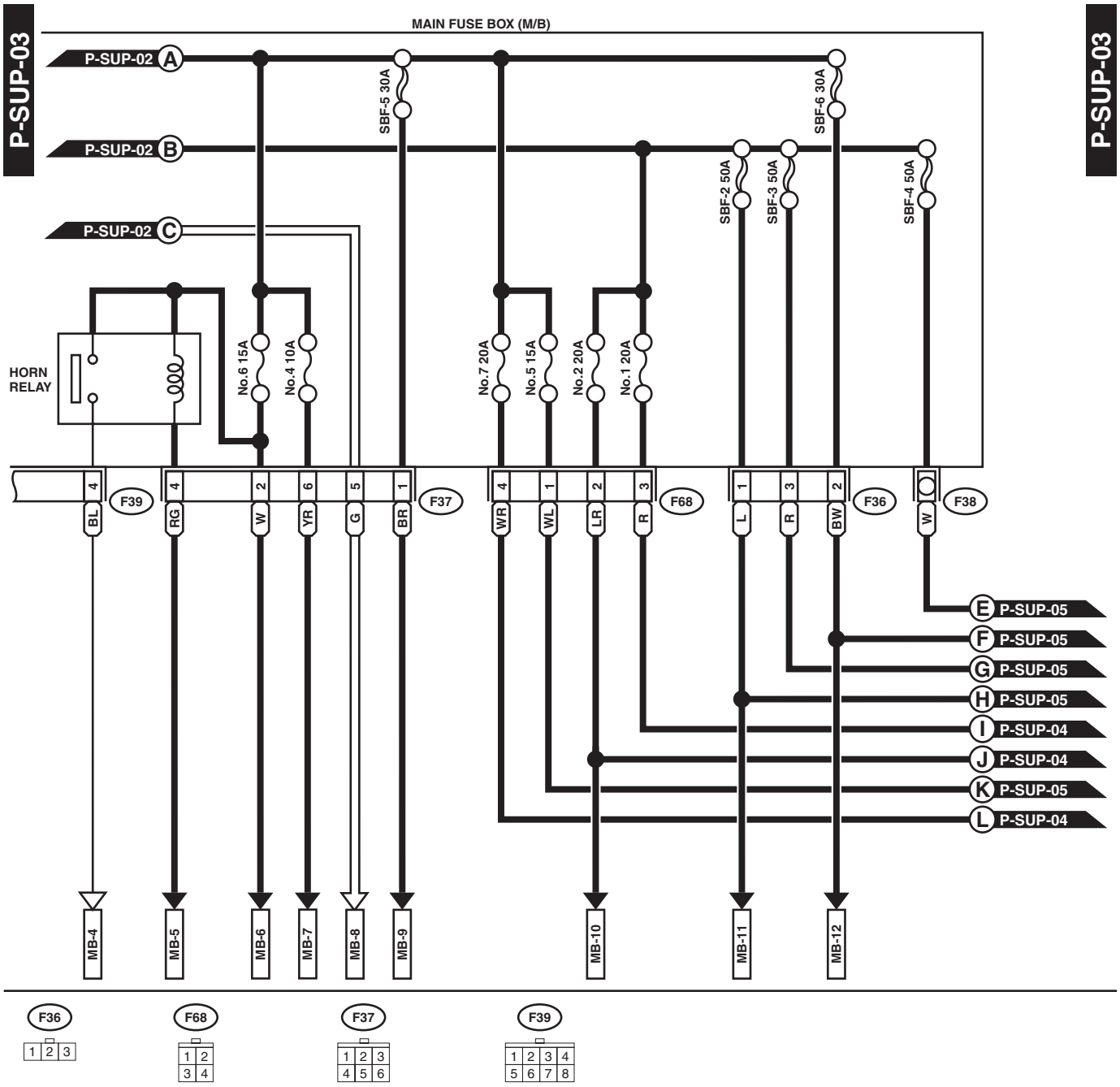
P-SUP-03
MAIN FUSE BOX (M/B)
P-SUP-02 A
P-SUP-02 B
P-SUP-02 C
SBF-5 30A
SBF-6 30A
SBF-2 50A
SBF-3 50A
SBF-4 50A
HORN RELAY
No.6 15A
No.4 10A
No.7 20A
No.5 15A
No.2 20A
No.1 20A
F39
F37
F68
F36
F38
BL
RG
W
YR
G
BR
WR
WL
LR
R
L
R
BW
W
E P-SUP-05
F P-SUP-05
G P-SUP-05
H P-SUP-05
I P-SUP-04
J P-SUP-04
K P-SUP-05
L P-SUP-04
MB-4
MB-5
MB-6
MB-7
MB-8
MB-9
MB-10
MB-11
MB-12
F36
F68
F37
F39

WI-14773

Power Supply Circuit

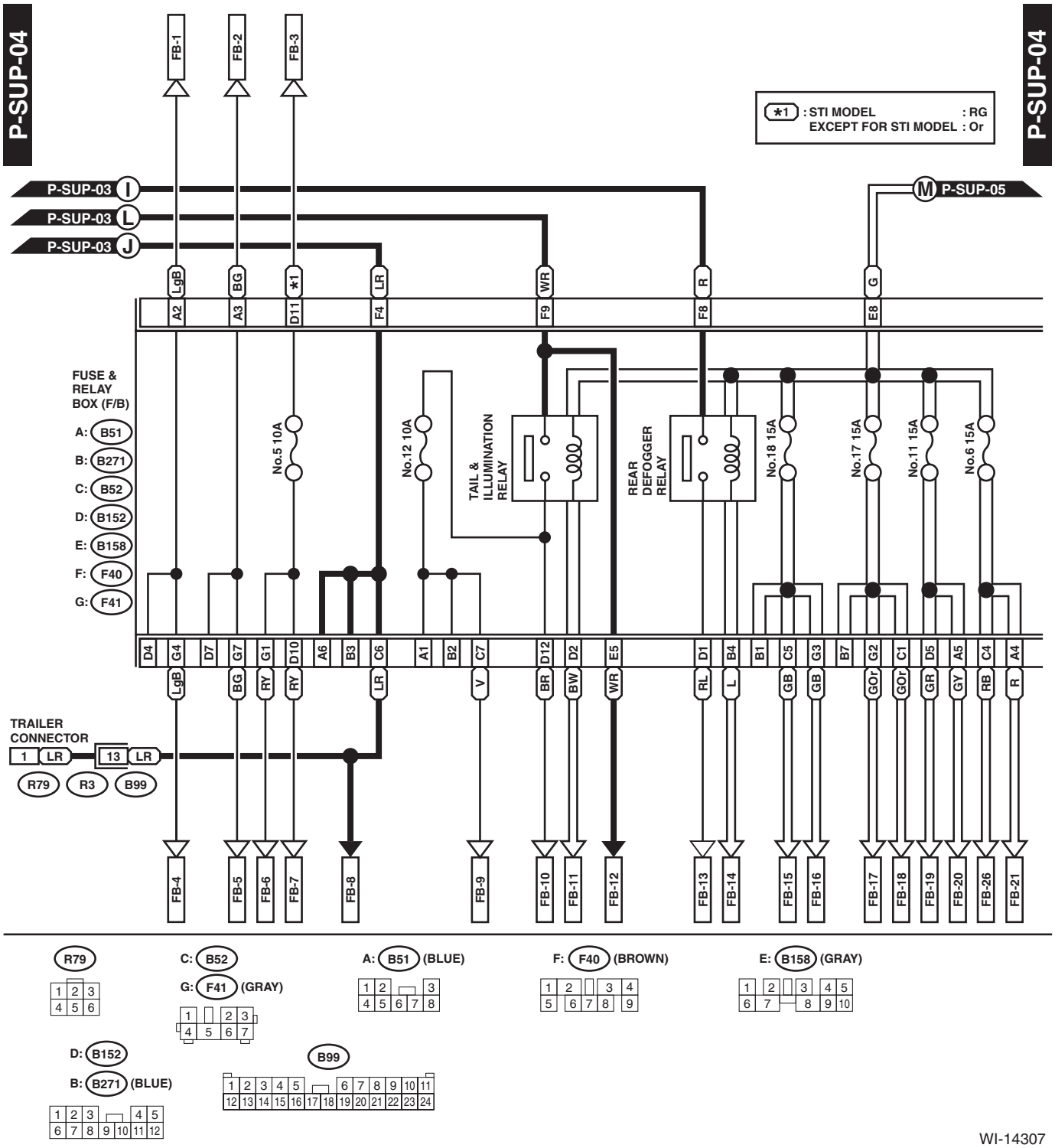

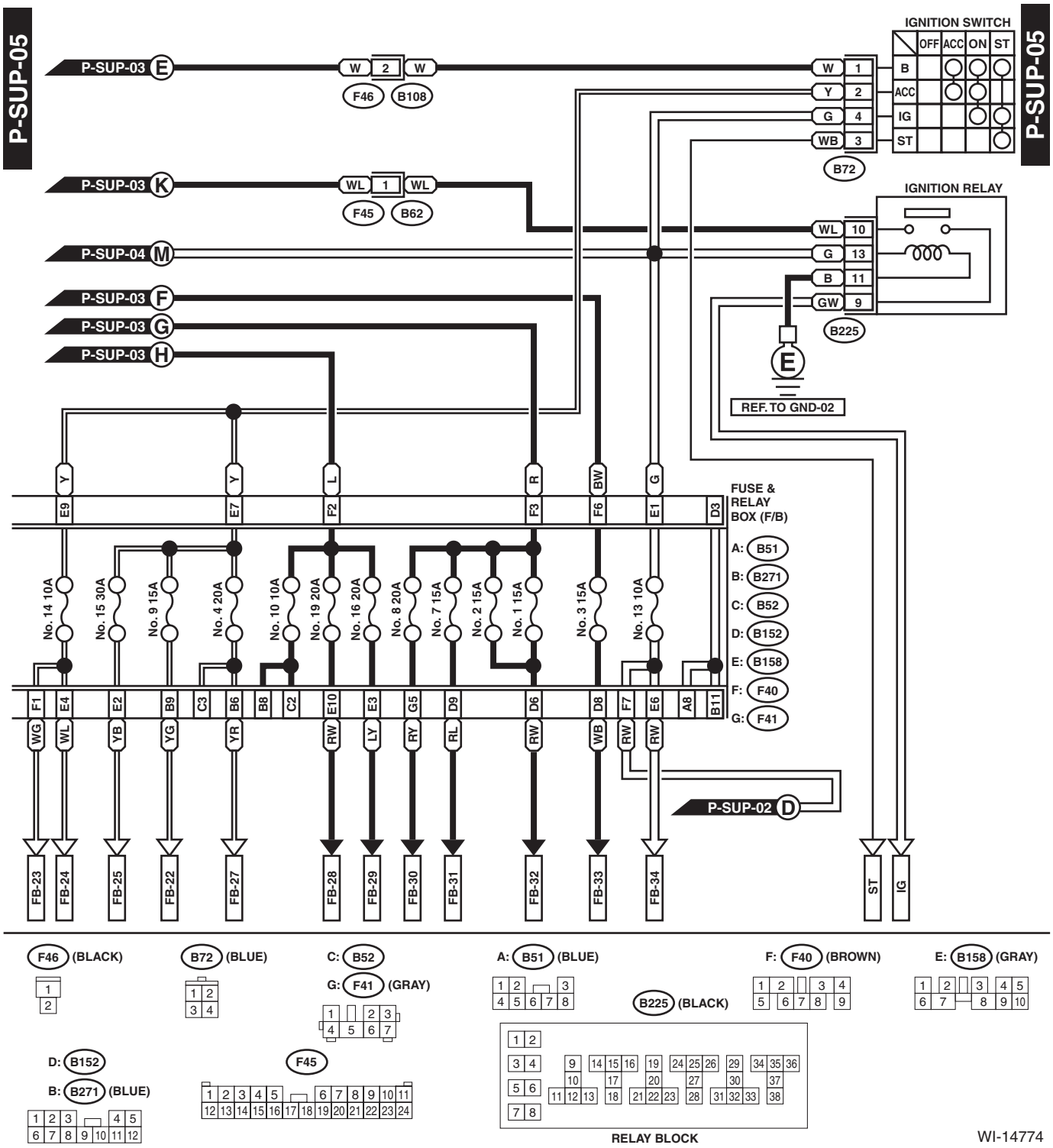
P-SUP-05
P-SUP-03 E
W 2 W
F46 B108
P-SUP-03 K
WL 1 WL
F45 B62
P-SUP-04 M
P-SUP-03 F
P-SUP-03 G
P-SUP-03 H
IGNITION SWITCH
OFF ACC ON ST
B
ACC
IG
ST
W 1
Y 2
G 4
WB 3
B72
IGNITION RELAY
WL 10
G 13
B 11
GW 9
B225
E
REF. TO GND-02
Y E9
Y E7
L F2
R F3
BW F6
G E1
D3
FUSE & RELAY BOX (F/B)
A: B51
B: B271
C: B52
D: B152
E: B158
F: F40
G: F41
No. 14 10A
No. 15 30A
No. 9 15A
No. 4 20A
No. 10 10A
No. 19 20A
No. 16 20A
No. 8 20A
No. 7 15A
No. 2 15A
No. 1 15A
No. 3 15A
No. 13 10A
F1 WG
E4 WL
E2 YB
B9 YG
C3
B6 YR
B8
C2
E10 RW
E3 LY
G5 RY
D9 RL
D6 RW
D8 WB
F7 RW
E6 RW
A8
B11
P-SUP-02 D
FB-23
FB-24
FB-25
FB-22
FB-27
FB-28
FB-29
FB-30
FB-31
FB-32
FB-33
FB-34
ST
IG
F46 (BLACK)
B72 (BLUE)
C: B52
G: F41 (GRAY)
A: B51 (BLUE)
B225 (BLACK)
F: F40 (BROWN)
E: B158 (GRAY)
D: B152
B: B271 (BLUE)
F45
RELAY BLOCK
WI-14774

No.	Load
MB-1	Relay holder (fuse) Relay holder SBF holder Secondary air relay holder
MB-2	Combination meter Headlight RH
MB-3	Headlight LH
MB-4	Horn
MB-5	Cruise control switch Horn switch Keyless entry control module Security horn relay
MB-6	Hazard switch Ignition starter and steering lock assembly Keyless entry control module
MB-7	TCM Driver's control center differential relay Driver's control center differential control module
MB-8	Body integrated unit Diode (daytime running light)
MB-9	Data link connector Fuel pump relay Main relay Electronic throttle control relay IMM ECM A/F and Oxygen sensor relay
MB-10	Keyless buzzer
MB-11	Fuse (rear 12 V accessory relay)
MB-12	Power window circuit breaker
SBF-8	ABS control module
IG	Hazard switch Power window relay
ST	Starter cut relay
FB-1	Combination meter Hazard switch Rear turn signal light RH Trailer connector Turn signal switch Keyless entry control module
FB-2	Combination meter Hazard switch Rear turn signal light LH Trailer connector Turn signal switch Keyless entry control module
FB-3	Parking switch Tail light relay HID relay
FB-4	Front turn signal light RH
FB-5	Front turn signal light LH
FB-6	Front clearance light LH Front clearance light RH Headlight beam leveler LH Headlight beam leveler RH

No.	Load
FB-7	License plate light Tail light LH Tail light RH Trailer connector Headlight beam leveler switch
FB-8	Clock Auto A/C control module Combination meter Ignition starter and steering lock assembly Keyless entry control module Radio Room light Spot map light IMM ECM Impact sensor Trunk room light Luggage room light
FB-9	Clock Combination meter Illumination light Body integrated unit Headlight beam leveler switch
FB-10	Parking switch
FB-11	ECM Lighting switch
FB-12	Parking switch Tail light relay
FB-13	Mirror heater relay Rear defogger Rear defogger switch Auto A/C control module
FB-14	Body integrated unit ECM
FB-15	ABS control module Back-up light switch (MT model) Data link connector Cruise control switch ECM Daytime running light relay High beam relay Keyless entry control module Impact sensor Vehicle speed sensor (MT model) Wiper deicer relay Wiper deicer timer Stop light and brake switch Cruise clutch switch (MT model)
FB-16	Main fan relay 1 Main fan relay 2
FB-17	A/C relay Sub fan relay 1 Sub fan relay 2 A/C pressure switch
FB-18	Auto A/C control module Blower fan motor relay Illumination light

No.	Load
FB-19	ECM Fuel pump relay Inhibitor switch (AT model) IMM ECM Ignition coil No. 1 Ignition coil No. 2 Ignition coil No. 3 Ignition coil No. 4 Body integrated unit TCM Driver's control center differential control module Driver's control center differential relay Rear wheels rotating speed sensor Mode control panel
FB-20	Airbag control module
FB-21	Airbag control module
FB-22	Clock Auto A/C control module Radio
FB-23	Rear washer motor
FB-24	Rear wiper intermittent unit (wagon model) Rear wiper motor (wagon model)
FB-25	Combination switch Front washer motor Front wiper motor
FB-26	Occupant detection control module
FB-27	Compass mirror Front accessory power supply socket Body integrated unit TCM Rear 12 V accessory relay Remote control mirror switch Intercooler water spray switch Intercooler water spray timer
FB-28	Mirror heater relay Wiper deicer relay
FB-29	Stop light switch
FB-30	ABS control module
FB-31	Front fog light relay
FB-32	Blower fan motor relay
FB-33	Body integrated unit
FB-34	Combination meter High beam relay Tail light relay